DO NOT SCALE IF IN DOUBT ASK

© COPYRIGHT RESERVED ET ENVIRONMENTAL LTD.

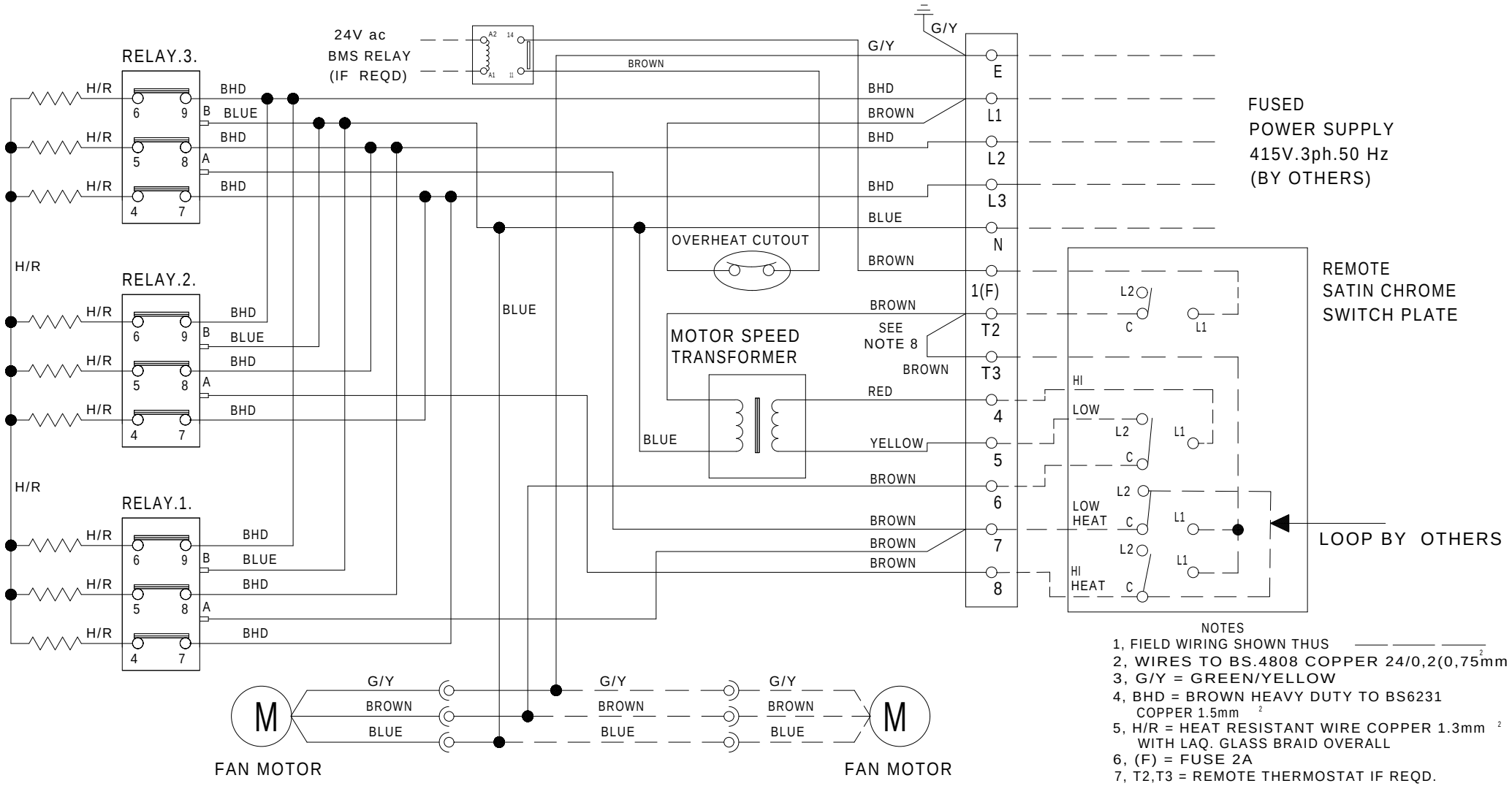

NOTES

1, FIELD WIRING SHOWN THUS
2, WIRES TO BS.4808 COPPER 24/0,2(0,75mm²)
3, G/Y = GREEN/YELLOW
4, BHD = BROWN HEAVY DUTY TO BS6231 COPPER 1.5mm²
5, H/R = HEAT RESISTANT WIRE COPPER 1.3mm² WITH LAQ. GLASS BRAID OVERALL
6, (F) = FUSE 2A
7, T2,T3 = REMOTE THERMOSTAT IF REQD.
8, REMOVE LINK IF THERMOSTAT IS USED

REV.	MOD.NO.	DATE	DRN	CHKD
3	ECR. 3348	21-04-07	DD	CDS

MODIFICATION

2	DCR1434	27-04-05	AMC	MR
1	REQ. 3782	7/12/04	MR	CDS

DRAWING TO B.S. 308:PARTS 1,2 AND 3.
WELDING TERMS AND SYMBOLS TO B.S. 499:PART 2.

GEOMETRIC TOLERANCE SYMBOLS

CHARACTERISTIC	SYM	CHARACTERISTIC	SYM
Straightness	—	Angularity	∠
Flatness	▱	Run out	↗
Roundness	○	Position	⌖
Cylindricity	⌭	Concentricity	◎
Profile of a line	⌒	Symmetry	⌯
Profile of a surface	⌓	M.M.C.	Ⓜ
Parallelism	//	Squareness	⊥

ALL DIMENSIONS IN MM THIRD ANGLE PROJECTION

TOLERANCES UNLESS OTHERWISE STATED
DIMENSIONAL ± 0,5
ANGULAR ± 1°

SCALE
MAT'L
FINISH

DRAWN	MR	
DATE	7/12/04	
CHECKED	CDS	
DATE	7/12/04	
APP'D		
DATE		

DIFFUSION ENVIRONMENTAL LTD
47 Central Avenue,West Molesey,Surrey,KT8 2QZ
Telephone 0181-783-0033. Fax 0181-783-0140

TITLE WIRING DIAGRAM.
MIRAGE 1000E 9KW, 1200E 9KW
1500E 12KW,1800E 18KW,2000E 18KW

JOB

DRG.NO. A3/17734